The Slice Family

Illuminate your space with precision Slices of homogeneous light. The Slice family offers linear 1” and 2” wide profiles in recessed and below ceiling options in lensed and multi-cell configurations. The 2” lensed recessed fixture offers both flanged and flangeless trim option, delivers over 750 lumens per foot with a modular design allowing continuous homogenous light to your specified length. With a Lambertian type distribution of ~100°, the fixture is perfect as a general continuous linear illumination device. You have found the 2" lensed recessed Slice and we hope you enjoy the details.

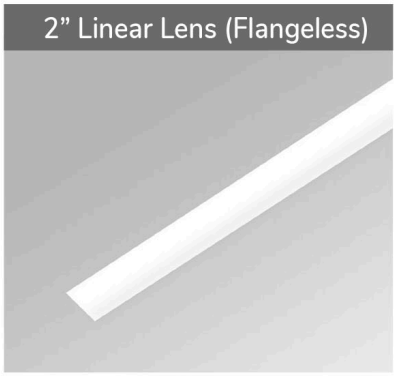

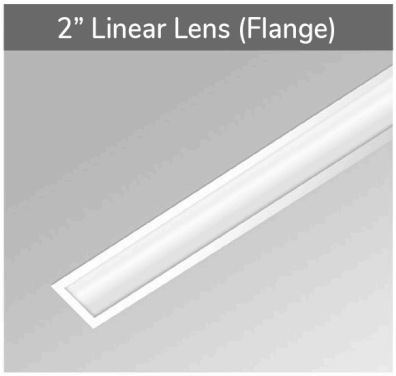

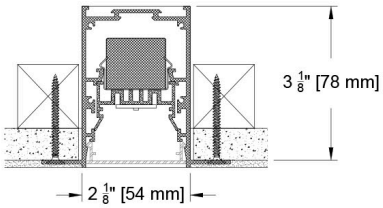

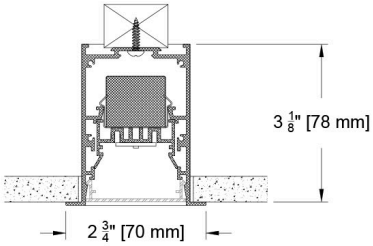

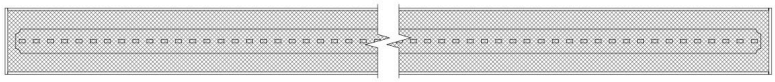

Lumens per Foot Photometrics				
2" Linear Lensed		Performance/Foot		
Source	System watts (W/ft)	Delivered Lumens (lm/ft)	Lumens/ Watt/ft	Peak cd
F4	5	395	82	165
F8	10	790	82	334

PROJECT: | TYPE:

SPECIFIER: | DATE:

Key Points (SL2DC-LRC)

Trim

- 14 color options + Custom and RAL# available
- Flange or Flangeless

Source Optics

- Over 80 lumens per watt per foot
- Up to 790 lm/ft available
- TITLE 24 Fixture photometrics support CA Title 24 part 6 compliance meeting requirements of JA8
- Even illumination with wide (~100°) lambertian type distribution
- 1' minimum board length. Depending on specified length, ends may have unlit area. Request submittal drawing if definition is required
- CCT offerings - 2700k, 3000k, 3500k and 4000k
- 90+ CRI and 50+ R9

Housing

- Specify to desired length for even continuous light
- Minimum 2' length for integral driver and appropriate driver loading
- Lengths longer than 8' are assembled in field with supplied joiners
- IC Airtight housing supports CA Title 24 part 6 compliance to JA8 requirements
- Damp listed

Driver And Control

- Integral Driver standard - remote upon request
- 0.1% dimming availalbe in 0-10 or DALI-2 protocols
- Flicker Free to IEEE 1789-2015 no effect to low risk
- Universal 120v to 277v

© 2026 Specialty Lighting Industries

Specialty Lighting Industries
1306 Doris Ave., Ocean, NJ 07712
Tel. 732.517.0800 | Fax 732.517.0971

Ordering Codes

PROJECT:

SPECIFIER:

DATE:

TYPE:

QUANTITY:

Ordering Code Example: SL2DC-LRC-AF-450"-F8-30-SY2-P16

FIXTURE	MOUNTING	LENGTH	LUMENS / WATTS	CCT	DRIVER / CONTROL	TRIM FINISH	ACCESSORIES
SL2DC-LRC							
Slice 2" Continuous Linear Recessed Lensed Downlight	**Flanged Housings** AF ● ● Flanged Airtight/IC **Flangeless Housings** AP ● ● Airtight Plaster *IC-Rated* ● ● Supports CA T24 part 6 compliance meeting JA8 Requirements	__ Specify exact length in inches*^ *Minimum length of 24 inches required (2 modules) ^Minimum board length of 12" (1 module) Note: Depending on length specified, ends may have unlit area. Please request submital drawing if unlit area definition is required.	F4 ● ● 5W 395Lm 90+CRI, 50+R9 values per foot F8 ● ● 10W 790Lm 90+CRI, 50+R9 values per foot ● ● Supports CA Title 24 part 6 compliance meeting JA8 requirements	27 2700K 30 3000K 35 3500K 40 4000K	SY1 0-10 1.0%, UNV (120-277V) linear SY2 0-10 1.0%, UNV (120-277V) log E1 0-10 0.1%, UNV (120-277V) log E2 DALI-2 0.1%, UNV (120-277V) log E3 0-10 0.1%, UNV (120-277V) linear Note: Integral driver standard. Remote mounting upon request	**Standard** B Black Paint **Optional** W White Paint PXX Specialty Paint Color* P01-P15 C Custom/RAL Color* *See Finish Guide FINISH GUIDE LINK	CP Chicago Plenum

© 2026 Specialty Lighting Industries

NOTE: Last Updated on Wed, Oct 21, 2026 4:43 PM.
These specifications are subject to change without notice.

Specialty Lighting Industries
1306 Doris Ave., Ocean, NJ 07712
Tel. 732.517.0800 | Fax 732.517.0971

Ceiling Cutouts and Dimensions

Minimum 2' length. Minimum board length of 12". Depending on length specified, ends may have unlit area. Request submittal drawing if unlit end area definition is required.

SL2DC- Recessed Flangeless Mount AP

(SL2DC-LRC-AP-)

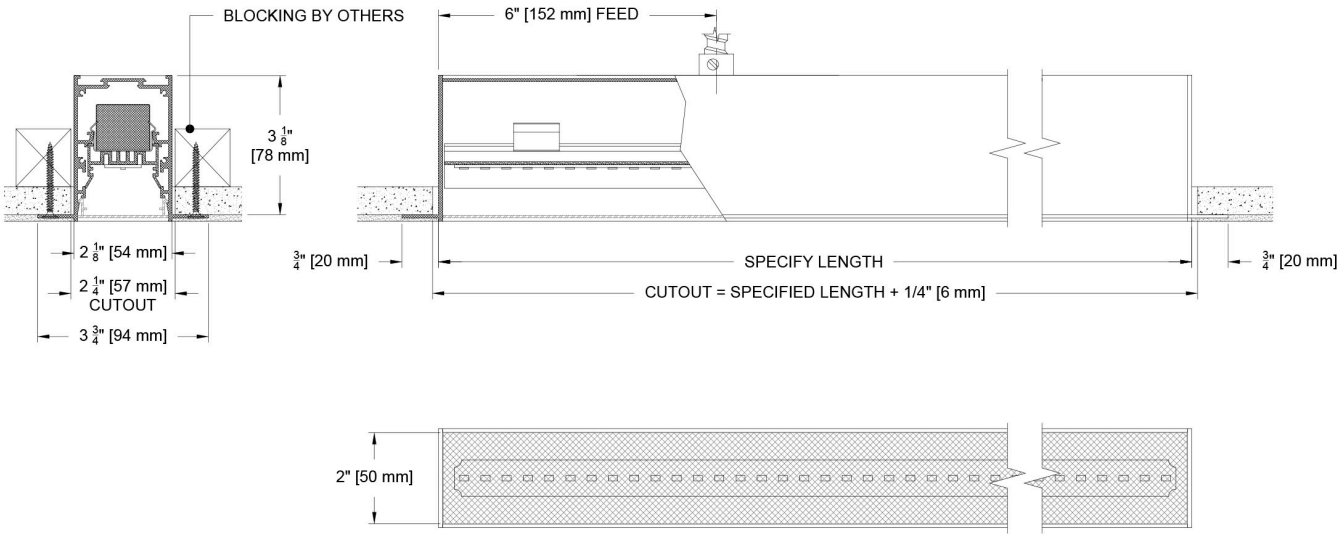

SL2DC- Recessed Flange Mount AF

(SL2DC-LRC-AF-)

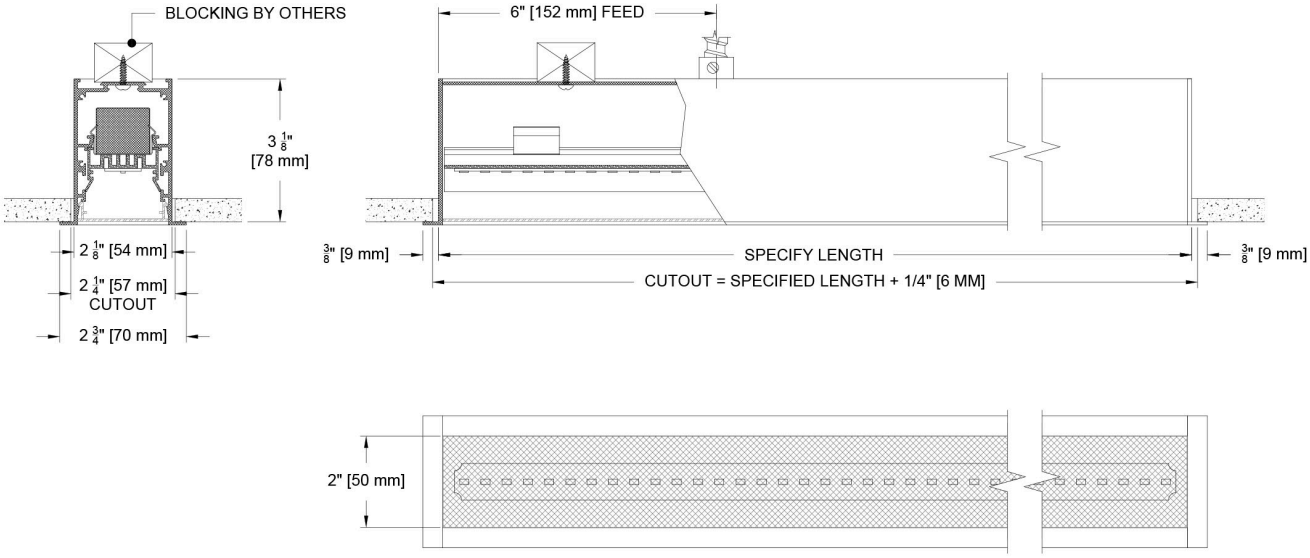

© 2026 Specialty Lighting Industries
NOTE: Last Updated on Wed, Oct 21, 2026 4:43 PM.
These specifications are subject to change without notice.
Specialty Lighting Industries
1306 Doris Ave., Ocean, NJ 07712
Tel. 732.517.0800 | Fax 732.517.0971

Photometric Table

Values are per foot. All flux measurements are delivered lumens based on 3000K and 1' (ft) length from production representative product. Flux can vary +/- 10% from source manufacturers rated flux range. Measurements taken with standard lens in a black housing. System watts are based typical source datasheet power values + 20% driver losses. Efficacy values will vary based on length and driver load.

Lumens per Foot Photometrics

2" Linear Lensed		Performance/Foot		
Source	System watts (W/ft)	Delivered Lumens (lm/ft)	Lumens/ Watt/ft	Peak cd
F4	5	395	82	165
F8	10	790	82	334

CCT Multiplier

CCT	Citizen
2700	0.96
3000	1.00
3500	1.03
4000	1.04

All measurements are delivered lumens/ft.
ISO CD plot based on F4 source

Beam angle

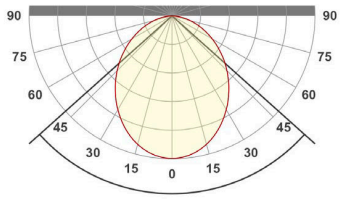

96.4°

© 2026 Specialty Lighting Industries
NOTE: Last Updated on Wed, Oct 21, 2026 4:43 PM.
These specifications are subject to change without notice.
Specialty Lighting Industries
1306 Doris Ave., Ocean, NJ 07712
Tel. 732.517.0800 | Fax 732.517.0971

Color Data

All data is based from goniometer measurements of production representative product. All lumen values can vary +/- 10% from LED manufacturer rated data range. Measurements at 3000 CCT unless otherwise noted.

F8 and F4 Linear Board

- <3 MacAdam Ellipse (<3 SDCM)
- 90+ CRI and RF
- 50+R9, Hue Bin 1 and 16

94 CRI	59 R9
92 RF	99 RG

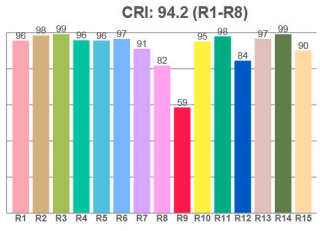

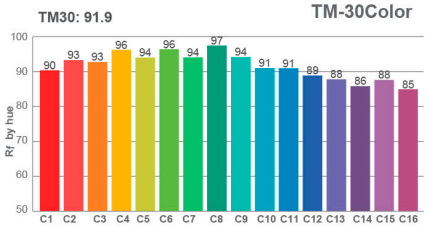

Spectra

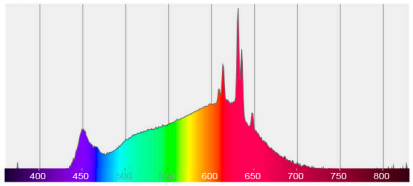

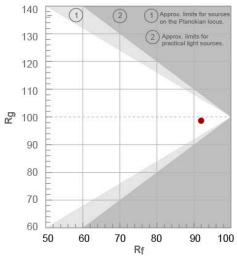

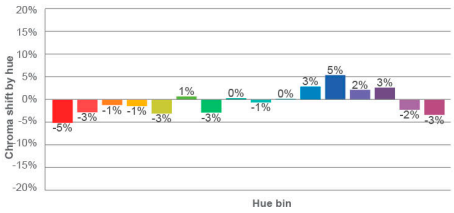

© 2026 Specialty Lighting Industries

NOTE: Last Updated on Wed, Oct 21, 2026 4:43 PM.
These specifications are subject to change without notice.

Specialty Lighting Industries
1306 Doris Ave., Ocean, NJ 07712
Tel. 732.517.0800 | Fax 732.517.0971